BJC-6200

PARTS CATALOG

REVISION 0

Q30-3310-220,720	120V(CCSI)
Q30-3310-221,721	120V(CAN)
Q30-3310-222,722	120V(LATIN LV)
Q30-3310-223,723	220V-240V(LATIN HV)
Q30-3310-230,630,730	220V-240V(EUR)
Q30-3310-231,631,731	220V-240V(GER)
Q30-3310-232,632,732	220V-240V(FRN)
Q30-3310-233,733	220V-240V(ASIA HV)
Q30-3310-234	220V-240V(EUR BULK)
Q30-3310-240,740	220V-240V(AUST)
Q30-3310-260,760	220V-240V(KRN)
Q30-3310-280,680,780	220V-240V(UK)
Q30-3312-223,723	120V(TWN)
Q30-3312-250,750	220V-240V(HK)

Canon

APR. 2000 **QY8-31AP-000**

COPYRIGHT © 2000 CANON INC. CANON BJC-6200 0400 GR 0.23-0 PRINTED IN JAPAN (IMPRIME AU JAPON)

0400 GR 0.23-0

BJC-6200

PARTS CATALOG

Canon

Application

This manual has been issued by Canon Inc. for qualified person to learn technical theory, installation, maintenance, and repair of products. This manual covers all localities where the products are sold. For this reason, there may be information in this manual that does not apply to your locality.

Corrections

This manual could include technical inaccuracies or typographical errors due to improvements or changes in the products. When changes occur in applicable products or in the content of this manual, Canon will release technical information as the need arises. In the event of major changes in the contents of this manual over a long or short period. Canon will issue a new editions of this manual.

The following paragraph does not apply to any countries where such provisions are inconsistent with local low.

Trademarks

The product names and company names described in this manual are the registered trademarks of the individual companies.

Copyright

This manual is copyrighted with all rights reserved. Under the copyright laws, this manual may not be copied, reproduced or translated into another language, in whole or in part, without the written consent of Canon Inc.

Copyright © 2000 by Canon Inc.

CANON INC.
BJ Printer Technical Support Dept.11
16-1, Shimonoge 3-chome, Takatsu-ku, Kawasaki-shi,
Kanagawa 213-8512, Japan

DTP System

This manual was produced on an Apple® Power Macintosh® G3 personal computer and Canon LBP-2030PS laser beam printer, final pages were printed on Valityper® 4300J.
A Canon mo-5001S™ Magneto-optical Storage Subsystem with mo-502M™ Magneto-Optical Storage Disk Cartridge and mo-IF2™ Machitosh® interface kit were used for storing large volumes of page layout, graphic and parts list data for this manual.
Parts layout illustrations and Logotypes were created using MACROMEDIA® FreeHand® 7J.
Pattern drawing were scanned by CanoScan 600 scanner with Adobe® photoshop®.
Documents and page layouts were created using QuarkXpress® 3.3J.
Parts lists were created using Helix Tecnologies® Herix Xpress® and converted to EPS files.

I. CONTENTS

A. PARTS LAYOUT & PARTS LIST
B. SCREWS & WASHERS LIST
C. NUMERICAL INDEX

II. ABOUT THIS MANUAL

A PARTS LAYOUT & PARTS LIST

Parts layout illustration

a) Parts search

Find a part from the parts layout illustration and find its key number from the parts list to identify the part number and name. For screws, nuts, washers, lock washers, pins, spacers, see SCREWS &WASHERS LIST.

Note: If parts have the same or similar shape but different specifications, their key number is assigned to several part numbers and names in the parts list.

b) Parts replacement procedure

To replace parts, the parts layout illustrations have figure numbers according to the disassembly procedure of the product. The parts that require careful work are shown the illustration.

Parts list

a) FIGURE & KEY No.

The FIGURE & KEY No. column corresponds to the key numbers assigned to the parts in the parts layout illustration.
It also corresponds to the part locations printed on the PC board.

b) PART NUMBER

The PART NUMBER column gives the part numbers corresponding to the key numbers. To order a part, indicate the part number clearly.
Note: Parts marked NPN are not service parts.

c) RANK

The service parts with N in the RANK column are order parts.

d) QTY

The QTY column gives the number of parts in the corresponding components layout illustration.

e) DESCRIPTION

The DESCRIPTION column gives the part names in English.
To order a part, indicate the part name, too.

OPTIONS & CONSUMABLES

These are illustrations and a list of units that can be used as optional consumable equipments.

TOOL LIST

This is a list of tools used for servicing products.

B. SCREWS & WASHERS LIST

This is a list of screws, nuts, washers, lock washers, pins, and spacers.
The QTY column does not give the number of parts used.

C. NUMERICAL INDEX

All the parts listed in this parts catalog are arranged in order of part number. You can identify part locations and names from the NUMERICAL INDEX.

A. PARTS LAYOUT & PARTS LIST

FIGURE 1 PRINTER & ACCESSORIES

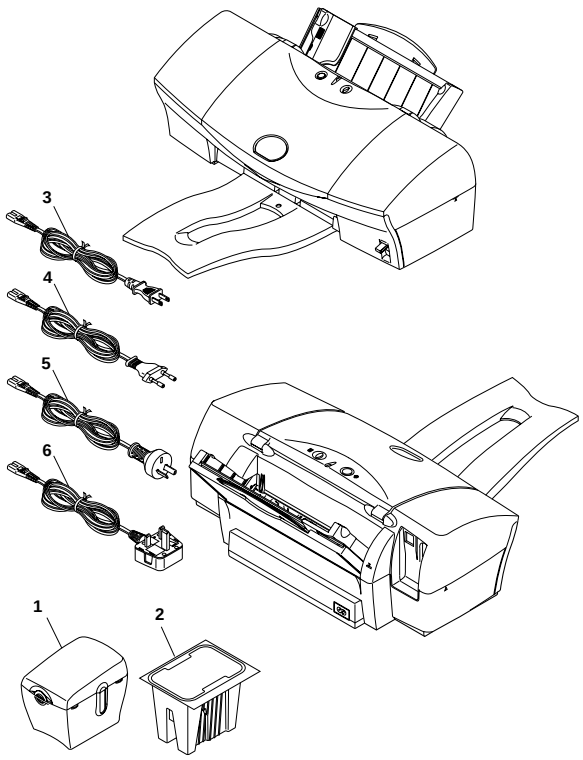

FIGURE 2 FRONT COVER

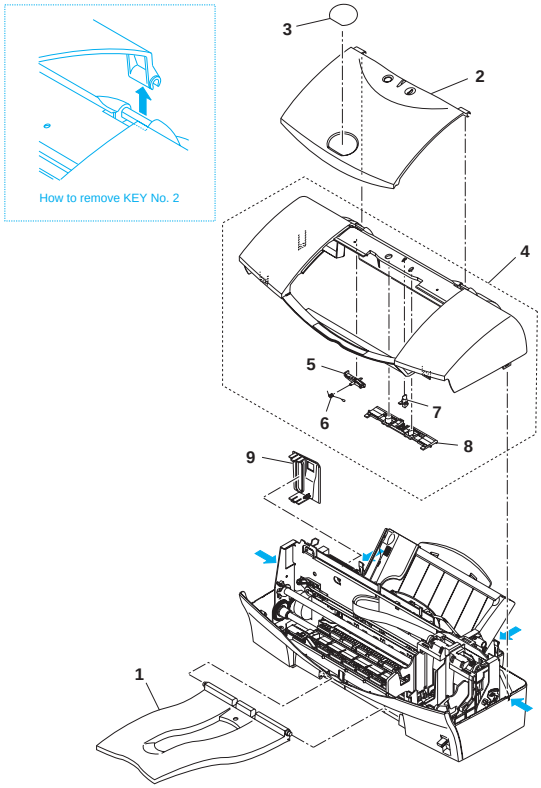

FIGURE 3 ASF UNIT & LOGIC BOARD

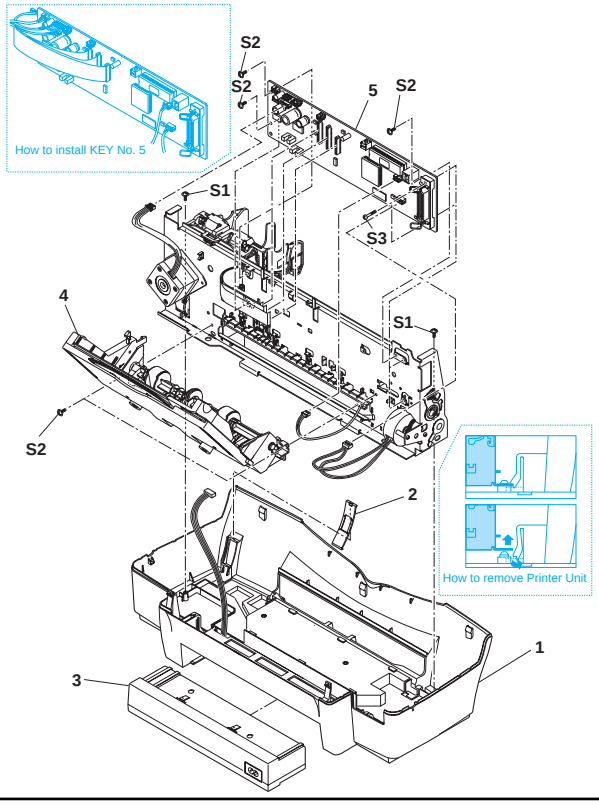

FIGURE 4 WASTE INK ABSORBER

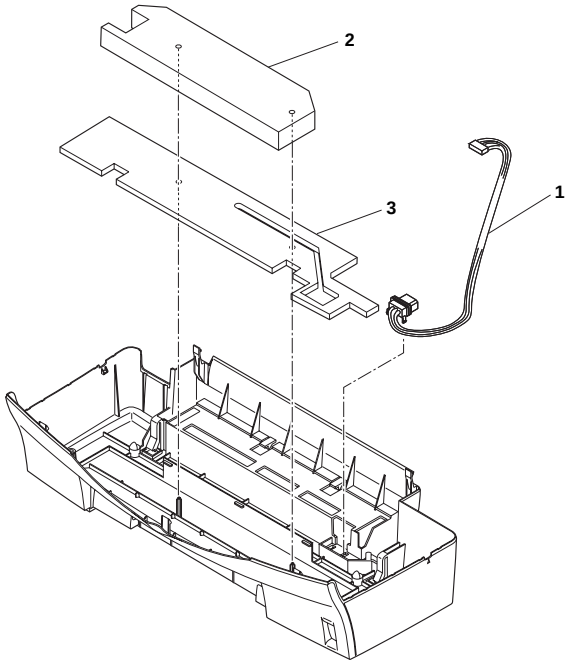

FIGURE & KEY NO.	PART NUMBER	RANK	QTY	DESCRIPTION	REMARKS
1- 1	QG5-1290-000	N	1	BJ CARTRIDGE CONTAINER	
2	NPN		1	COLOR BJ CARTRIDGE PACK	CONSUMABLES
3	WT3-5095-000		1	CORD, POWER	120V
4	WT3-5069-000		1	CORD, POWER	220V-240V
5	WT3-5060-000		1	CORD, POWER	220V-240V (AUS)
6	WT3-5090-000		1	CORD, POWER	220V-240V (UK)
2- 1	QB1-4578-000		1	OUTPUT TRAY	
2	QB1-4581-000		1	COVER, FRONT	
3	QB1-4582-000		1	PLATE, MODEL NAME	
4	QG5-1504-000		1	UPPER COVER UNIT	
5	QB1-4642-000		1	BUTTON, PUSH	
6	QB1-4664-000		1	SPRING, BUTTON	
7	QB1-4585-000		1	GUIDE, INDICATOR	
8	QB1-4584-000		1	BUTTON, PUSH	
9	QB1-4579-000		1	COVER, I/F	
3- 1	QG5-1505-000		1	BOTTOM CASE UNIT	(WITH FOOT)
2	QB1-4580-000		1	COVER, LEVER	
3	QH3-3383-000		1	AC ADAPTER: 100V-120V 50/60HZ	TWN
	QH3-3386-000		1	AC ADAPTER: 100V-120V 50/60HZ	
	QH3-3388-000		1	AC ADAPTER: 220V-240V 50/60HZ	
	QH3-3389-000		1	AC ADAPTER: 220V-240V 50/60HZ	AUST,ASIA HV,HK
4	QG5-1506-000		1	SHEET FEEDER UNIT	
5	QG2-3157-000		1	LOGIC BOARD ASS'Y	
4- 1	QG2-3216-000		1	DC CONNECTOR ASS'Y	(WITH CABLE)
2	QB1-4590-000		1	ABSORBER, INK	
3	QB1-4589-000		1	ABSORBER, INK	

FIGURE 5 PURGE UNIT

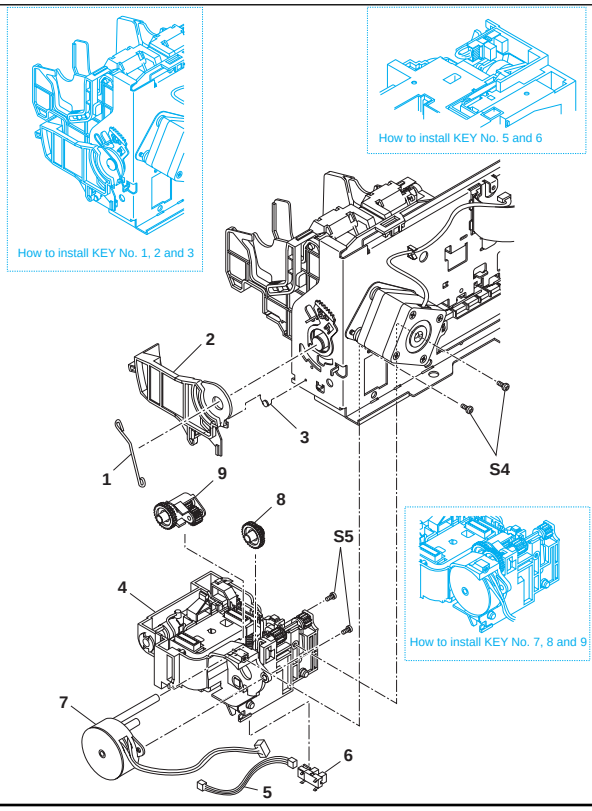

FIGURE 6 CARRIAGE UNIT

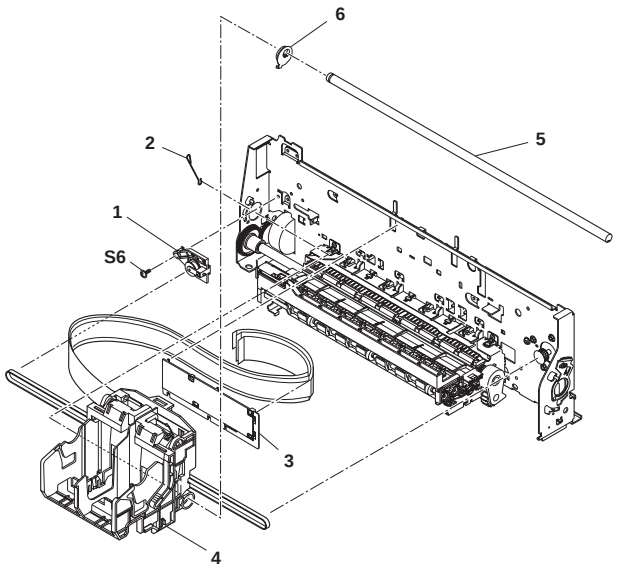

FIGURE 7 CARRIAGE PART

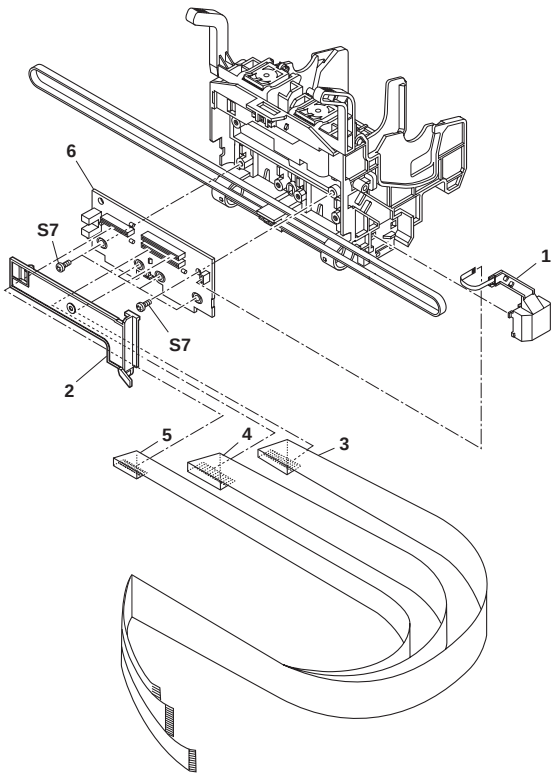

FIGURE 8 MOTOR

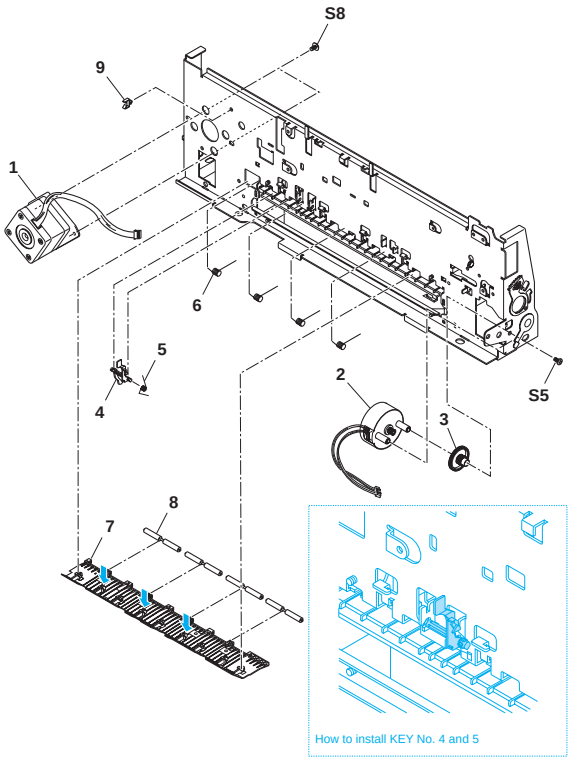

FIGURE & KEY NO.	PART NUMBER	RANK	QTY	DESCRIPTION	REMARKS
5 - 1	QB1-3685-000		1	CLIP, SHAFT	
2	QB1-4594-000		1	LEVER, FORMS THICKNESS	
3	QB1-3776-000		1	SPRING, TORSION	
4	QG5-1510-000		1	PURGE UNIT	
5	QH2-2415-000		1	CABLE, SENSOR	
6	WG8-5362-000	N	1	IC, TLP1241(C5), PHOTO INTERRUPTER	
7	QH4-4309-000		1	MOTOR, PAPER LIFTING	
8	QS5-0246-000		1	GEAR, TRANSMISSION	
9	QB1-4654-000		1	GEAR, CLUTCH	
6 - 1	QF5-0565-000		1	IDLER ROLLER ASS'Y	
2	QB1-3685-000		1	CLIP, SHAFT	
3	QB1-4597-000		1	HOLDER, CARRIAGE RIBBON CABLE	
4	QG5-1509-000		1	CARRIAGE UNIT	
5	QB1-4595-000	N	1	SHAFT, CARRIAGE	
6	QB1-4596-000		1	BUSHING	
7 - 1	QG5-1515-000		1	HP SENSOR HOLDER UNIT	
2	QB1-4601-000		1	GUIDE, RIBBON CABLE	
3	QH2-2405-000		1	CARRIAGE RIBBON CABLE	
4	QH2-2406-000		1	CARRIAGE RIBBON CABLE	
5	QH2-2407-000		1	CARRIAGE RIBBON CABLE	
6	QG2-3158-000		1	CARRIAGE BOARD ASS'Y	
8 - 1	QH4-4306-000		1	MOTOR, CARRIAGE	
2	QH4-4304-000		1	MOTOR, PAPER FEED	
3	QS5-0237-000		1	GEAR, SLOW DOWN	
4	QB1-4271-000		1	ARM, PAPER SENSOR	
5	QB1-4336-000		1	SPRING, TORSION	
6	QB1-4335-000		4	SPRING, TORSION	
7	QB1-4264-000		1	HOLDER, PRESSURE	
8	QB1-4265-000		4	ROLLER, PRESSURE	
9	WT2-0387-000		1	CLAMP	

FIGURE 9 PAPER FEED UNIT

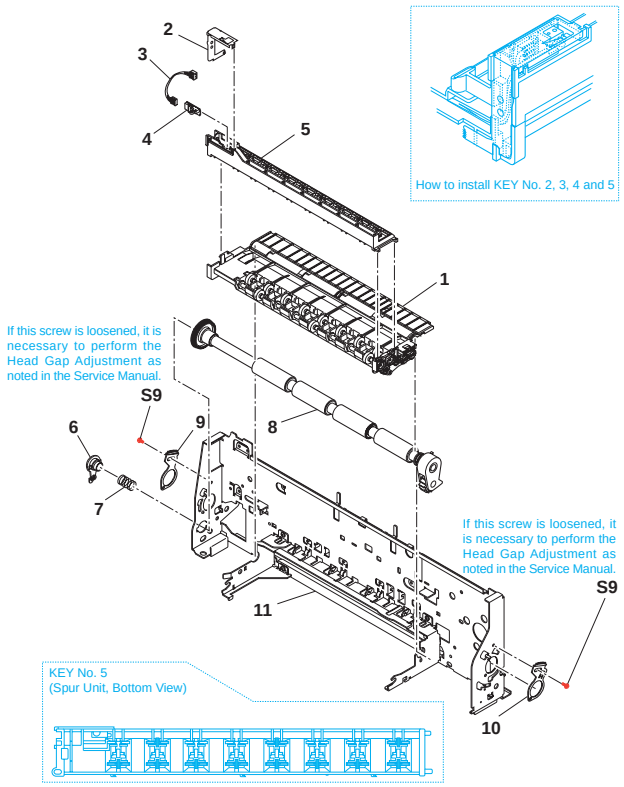

FIGURE 10 ASF PART

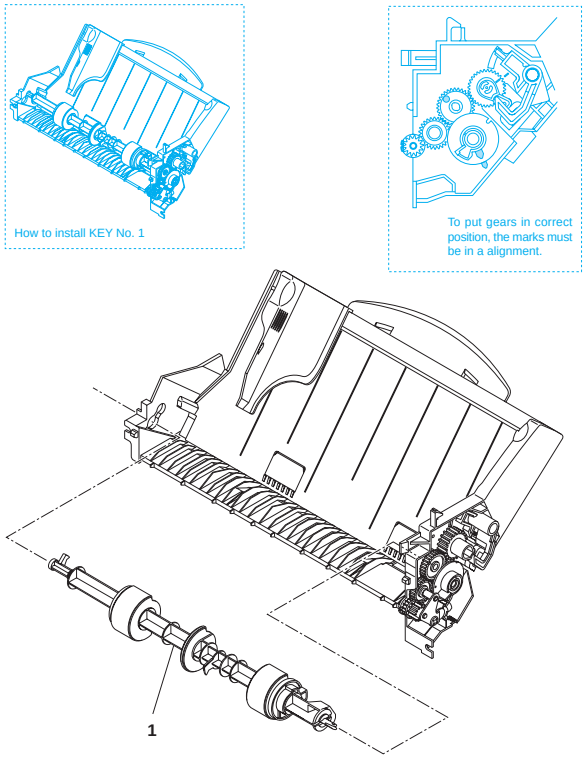

FIGURE 11 LOGIC BOARD COMPONENT

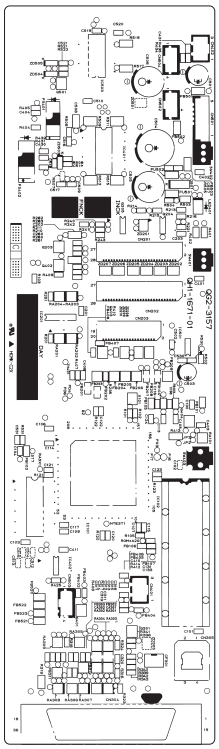

FIGURE 12 CARTRIDGE

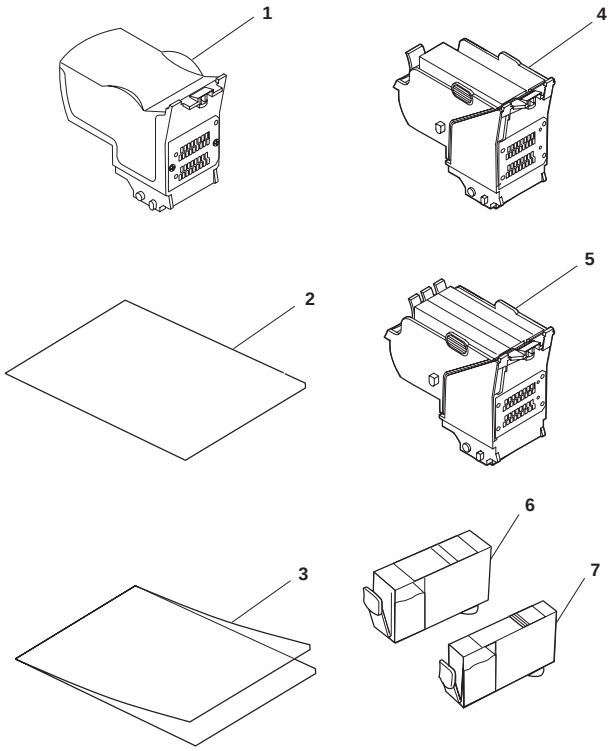

FIGURE & KEY NO.	PART NUMBER	RANK	QTY	DESCRIPTION	REMARKS
9 - 1	QG5-1436-000		1	PLATEN ASS'Y	
2	QB1-4282-000		1	COVER, INK SENSOR	
3	QH2-2351-000		1	INK SENSOR CONNECTOR ASS'Y	
4	QH8-0220-000		1	IC, GP4S10S, PHOTO INTERRUPTER	
5	QG5-1437-000		1	SPUR HOLDER ASS'Y	
6	QB1-4593-000		1	BUSHING	
7	QS5-2252-000		1	SPRING, COIL	
8	QF5-0564-000		1	FEED ROLLER ASS'Y	
9	QB1-4272-000	N	1	BUSHING, FORMS THICKNESS (L)	
10	QB1-4273-000	N	1	BUSHING, FORMS THICKNESS (R)	
11	NPN		1	FRAME UNIT	
10 - 1	QG5-1431-000		1	PICK-UP ROLLER UNIT	
11 - FU501	WD1-5059-000		1	FUSE: FCC3220202	
FU502	WD1-5059-000		1	FUSE: FCC3220202	
IC101	QH8-0879-000		1	IC, UPD82674GD-022-LML, ASIC	
IC102	QG2-3041-000		1	IC, K3P4V173AD-DC10000, MASKED-ROM	
IC103	WA7-0327-000	N	1	IC, MB81V18165B-60PFTN, DRAM	
IC401	WA4-7472-000		1	IC, TB62201AF, DRIVER	
IC402	WA7-0947-000	N	1	IC, S-93C56AFJ, EEP-ROM	
IC503	WA4-7264-000		1	IC, MTD2002G, DRIVER	
LED401	WG2-5157-000	N	1	LED: SEC2494C	
PS401	WG8-5356-000	N	1	IC, TLP831(CANO), PHOTO INTERRUPTER	
PS402	QH7-0641-000	N	1	IC, TLP832(CANO), PHOTO INTERRUPTER	
SW401	WC2-5366-000	N	1	SWITCH, PUSH: SKQNLA	
SW402	WC2-5366-000	N	1	SWITCH, PUSH: SKQNLA	
SW403	WC2-5068-000	N	1	SWITCH, PUSH: SKHVLH	
TH401	WP2-5104-000	N	1	THERMISTOR: TBPS1473J475H5Q	
X101	WK2-6002-000	N	1	OSCILLATOR, CERAMIC: 48MHZ	
12 - 1	QG3-4005-000	N	1	SCANNING CARTRIDGE	
2	QA2-4532-000		1	SHEET, WHITE STANDARD	
3	QA2-4623-000		1	HOLDER, PLASTIC (III)	A4
	QA2-4628-000	N	1	HOLDER, SCANNING	B5
4	NPN		1	BLACK BJ CARTRIDGE BC-30	CONSUMABLES
5	NPN		1	COLOR BJ CARTRIDGE BC-31	CONSUMABLES
	NPN		1	PHOTO BJ CARTRIDGE BC-32 PHOTO	CONSUMABLES
6	NPN		1	BLACK INK TANK BCI-3BK	CONSUMABLES
7	NPN		1	CYAN INK TANK BCI-3C	CONSUMABLES
	NPN		1	MAGENTA INK TANK BCI-3M	CONSUMABLES
	NPN		1	YELLOW INK TANK BCI-3Y	CONSUMABLES
	NPN		1	PHOTO CYAN INK TANK BCI-3C PHOTO	CONSUMABLES
	NPN		1	PHOTO MAGENTA INK TANK BCI-3M PHOTO	CONSUMABLES
	NPN		1	PHOTO BLACK INK TANK BCI-3BK PHOTO	CONSUMABLES

FIGURE 13 TOOL

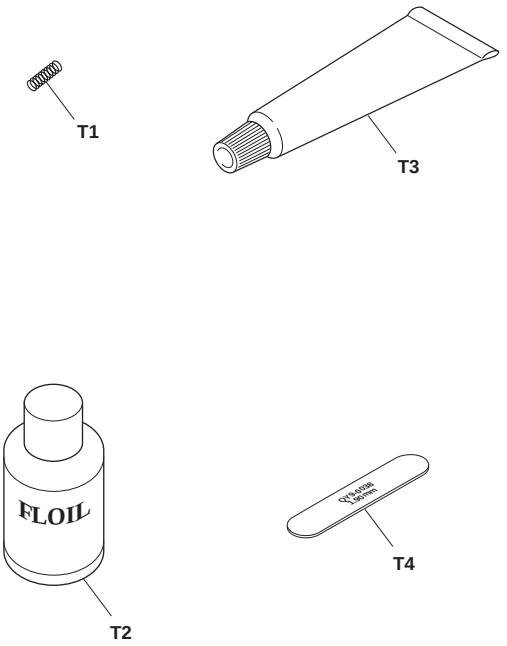

FIGURE & KEY NO.	PART NUMBER	RANK	QTY	DESCRIPTION	REMARKS
T - 1	QY9-0043-000		1	SPRING, TENSION	
2	CK-0562-000		1	GREASE, MOLYKOTE PG-641	
3	QY9-0045-000		1	LUBE, FLOIL 946P, OIL	
4	QY9-0038-000		1	GAUGE, GAP: 1.9MM	

B. SCREWS & WASHERS LIST

FIGURE & KEY NO.	PART NUMBER	RANK	QTY	DESCRIPTION	REMARKS
S - 1	XA9-1137-000			SCREW, TAP, WASHER HEAD, M3X6	
2	XB6-7300-407			SCREW, TP: M3 x 4 MM	
3	XB1-2301-207			SCREW, M3x12	
4	XB4-7300-809			SCREW, B-TIGHT: M3 X 8 MM	
5	XB1-2300-607			SCREW, MACHINE, BINDING HEAD, M3x6	
6	XB2-8300-807			SCREW, M3X8	
7	XB4-7301-009			SCREW, B-TIGHT: M3 X 10 MM	
8	XB6-7300-609			SCREW, MACHINE M3X6	
9	XA9-1136-000			SCREW, RS M3X4	

This page intentionally left blank

C. NUMERICAL INDEX

PART NUMBER	FIGURE & KEY NO.	DESCRIPTION
CK-0562-000	T - 2	GREASE, MOLYKOTE PG-641
QA2-4532-000	12 - 2	SHEET, WHITE STANDARD
QA2-4623-000	12 - 3	HOLDER, PLASTIC (III)
QA2-4628-000	12 - 3	HOLDER, SCANNING
QB1-3685-000	5 - 1	CLIP, SHAFT
	6 - 2	
QB1-3776-000	5 - 3	SPRING, TORSION
QB1-4264-000	8 - 7	HOLDER, PRESSURE
QB1-4265-000	8 - 8	ROLLER, PRESSURE
QB1-4271-000	8 - 4	ARM, PAPER SENSOR
QB1-4272-000	9 - 9	BUSHING, FORMS THICKNESS (L)
QB1-4273-000	9 - 10	BUSHING, FORMS THICKNESS (R)
QB1-4282-000	9 - 2	COVER, INK SENSOR
QB1-4335-000	8 - 6	SPRING, TORSION
QB1-4336-000	8 - 5	SPRING, TORSION
QB1-4578-000	2 - 1	OUTPUT TRAY
QB1-4579-000	2 - 9	COVER, I/F
QB1-4580-000	3 - 2	COVER, LEVER
QB1-4581-000	2 - 2	COVER, FRONT
QB1-4582-000	2 - 3	PLATE, MODEL NAME
QB1-4584-000	2 - 8	BUTTON, PUSH
QB1-4585-000	2 - 7	GUIDE, INDICATOR
QB1-4589-000	4 - 3	ABSORBER, INK
QB1-4590-000	4 - 2	ABSORBER, INK
QB1-4593-000	9 - 6	BUSHING
QB1-4594-000	5 - 2	LEVER, FORMS THICKNESS
QB1-4595-000	6 - 5	SHAFT, CARRIAGE
QB1-4596-000	6 - 6	BUSHING
QB1-4597-000	6 - 3	HOLDER, CARRIAGE RIBBON CABLE
QB1-4601-000	7 - 2	GUIDE, RIBBON CABLE
QB1-4642-000	2 - 5	BUTTON, PUSH
QB1-4654-000	5 - 9	GEAR, CLUTCH
QB1-4664-000	2 - 6	SPRING, BUTTON
QF5-0564-000	9 - 8	FEED ROLLER ASS'Y
QF5-0565-000	6 - 1	IDLER ROLLER ASS'Y
QG2-3041-000	11 - IC102	IC, K3P4V173AD-DC10000, MASKED-ROM
QG2-3157-000	3 - 5	LOGIC BOARD ASS'Y
QG2-3158-000	7 - 6	CARRIAGE BOARD ASS'Y
QG2-3216-000	4 - 1	DC CONNECTOR ASS'Y
QG3-4005-000	12 - 1	SCANNING CARTRIDGE
QG5-1290-000	1 - 1	BJ CARTRIDGE CONTAINER
QG5-1431-000	10 - 1	PICK-UP ROLLER UNIT
QG5-1436-000	9 - 1	PLATEN ASS'Y
QG5-1437-000	9 - 5	SPUR HOLDER ASS'Y
QG5-1504-000	2 - 4	UPPER COVER UNIT
QG5-1505-000	3 - 1	BOTTOM CASE UNIT
QG5-1506-000	3 - 4	SHEET FEEDER UNIT
QG5-1509-000	6 - 4	CARRIAGE UNIT
QG5-1510-000	5 - 4	PURGE UNIT
QG5-1515-000	7 - 1	HP SENSOR HOLDER UNIT
QH2-2351-000	9 - 3	INK SENSOR CONNECTOR ASS'Y
QH2-2405-000	7 - 3	CARRIAGE RIBBON CABLE
QH2-2406-000	7 - 4	CARRIAGE RIBBON CABLE
QH2-2407-000	7 - 5	CARRIAGE RIBBON CABLE
QH2-2415-000	5 - 5	CABLE, SENSOR
QH3-3383-000	3 - 3	AC ADAPTER: 100V-120V 50/60HZ
QH3-3386-000	3 - 3	AC ADAPTER: 100V-120V 50/60HZ
QH3-3388-000	3 - 3	AC ADAPTER: 220V-240V 50/60HZ

PART NUMBER	FIGURE & KEY NO.	DESCRIPTION
QH3-3389-000	3 - 3	AC ADAPTER: 220V-240V 50/60HZ
QH4-4304-000	8 - 2	MOTOR, PAPER FEED
QH4-4306-000	8 - 1	MOTOR, CARRIAGE
QH4-4309-000	5 - 7	MOTOR, PAPER LIFTING
QH7-0641-000	11 - PS402	IC, TLP832(CANO), PHOTO INTERRUPTER
QH8-0220-000	9 - 4	IC, GP4S10S, PHOTO INTERRUPTER
QH8-0879-000	11 - IC101	IC, UPD82674GD-022-LML, ASIC
QS5-0237-000	8 - 3	GEAR, SLOW DOWN
QS5-0246-000	5 - 8	GEAR, TRANSMISSION
QS5-2252-000	9 - 7	SPRING, COIL
QY9-0038-000	T - 4	GAUGE, GAP: 1.9MM
QY9-0043-000	T - 1	SPRING, TENSION
QY9-0045-000	T - 3	LUBE, FLOIL 946P, OIL
WA4-7264-000	11 - IC503	IC, MTD2002G, DRIVER
WA4-7472-000	11 - IC401	IC, TB62201AF, DRIVER
WA7-0327-000	11 - IC103	IC, MB81V18165B-60PFTN, DRAM
WA7-0947-000	11 - IC402	IC, S-93C56AFJ, EEP-ROM
WC2-5068-000	11 - SW403	SWITCH, PUSH: SKHVLH
WC2-5366-000	11 - SW401	SWITCH, PUSH: SKQNLA
	11 - SW402	
WD1-5059-000	11 - FU501	FUSE: FCC3220202
	11 - FU502	
WG2-5157-000	11 - LED401	LED: SEC2494C
WG8-5356-000	11 - PS401	IC, TLP831(CANO), PHOTO INTERRUPTER
WG8-5362-000	5 - 6	IC, TLP1241(C5), PHOTO INTERRUPTER
WK2-6002-000	11 - X101	OSCILLATOR, CERAMIC: 48MHZ
WP2-5104-000	11 - TH401	THERMISTOR: TBPS1473J475H5Q
WT2-0387-000	8 - 9	CLAMP
WT3-5060-000	1 - 5	CORD, POWER
WT3-5069-000	1 - 4	CORD, POWER
WT3-5090-000	1 - 6	CORD, POWER
WT3-5095-000	1 - 3	CORD, POWER
XA9-1136-000	S - 9	SCREW, RS M3X4
XA9-1137-000	S - 1	SCREW, TAP, WASHER HEAD, M3X6
XB1-2300-607	S - 5	SCREW, MACHINE, BINDING HEAD, M3x6
XB1-2301-207	S - 3	SCREW, M3x12
XB2-8300-807	S - 6	SCREW, M3X8
XB4-7300-809	S - 4	SCREW, B-TIGHT: M3 X 8 MM
XB4-7301-009	S - 7	SCREW, B-TIGHT: M3 X 10 MM
XB6-7300-407	S - 2	SCREW, TP: M3 x 4 MM
XB6-7300-609	S - 8	SCREW, MACHINE M3X6

This document is printed
on 100% recycled paper.

Canon

PRINTED IN JAPAN (IMPRIME AU JAPON)

CANON INC.