BJC-8200
BJC-8200 *Photo*
PARTS CATALOG

REVISION 0

Q30-3201-220	120V(CCSI)
Q30-3201-221	120V(CAN)
Q30-3201-222	120V(LATIN LV)
Q30-3201-223	220V-240V(LATIN HV)
Q30-3201-233	220V-240V(ASIA HV)
Q30-3201-240	220V-240V(AUST)
Q30-3202-223	120V(TWN)
Q30-3202-250	220V-240V(HK)
Q30-3203-230	220V-240V(EUR)
Q30-3203-231	220V-240V(GER)
Q30-3203-232	220V-240V(FRN)
Q30-3203-280	220V-240V(UK)

Canon

NOV. 1999 **QY8-31AN-000**

COPYRIGHT © 1999 CANON INC. CANON BJC-8200 1199 SE 0.27-0 PRINTED IN JAPAN (IMPRIME AU JAPON)

1199 SE 0.27-0

BJC-8200
BJC-8200 *Photo*
PARTS CATALOG

Canon

Application

This manual has been issued by Canon Inc. for qualified person to learn technical theory, installation, maintenance, and repair of products. This manual covers all localities where the products are sold. For this reason, there may be information in this manual that does not apply to your locality.

Corrections

This manual could include technical inaccuracies or typographical errors due to improvements or changes in the products. When changes occur in applicable products or in the content of this manual, Canon will release technical information as the need arises. In the event of major changes in the contents of this manual over a long or short period. Canon will issue a new editions of this manual.

The following paragraph does not apply to any countries where such provisions are inconsistent with local low.

Trademarks

The product names and company names described in this manual are the registered trademarks of the individual companies.

Copyright

This manual is copyrighted with all rights reserved. Under the copyright laws, this manual may not be copied, reproduced or translated into another language, in whole or in part, without the written consent of Canon Inc.

Copyright © 1999 by Canon Inc.

CANON INC.
BJ Printer Technical Support Dept.
16-1, Shimonoge 3-chome, Takatsu-ku, Kawasaki-shi,
Kanagawa 213-8512, Japan

DTP System

This manual was produced on an Apple® Power Macintosh® G3 personal computer and Canon LBP-2030PS laser beam printer, final pages were printed on Valityper® 4300J.
A Canon mo-5001S™ Magneto-optical Storage Subsystem with mo-502M™ Magneto-Optical Storage Disk Cartridge and mo-IF2™ Machitosh® interface kit were used for storing large volumes of page layout, graphic and parts list data for this manual.
Parts layout illustrations and Logotypes were created using MACROMEDIA® FreeHand® 7J.
Pattern drawing were scanned by CanoScan 600 scanner with Adobe® photoshop®.
Documents and page layouts were created using QuarkXpress® 3.3J.
Parts lists were created using Helix Tecnologies® Herix Xpress® and converted to EPS files.

I. CONTENTS

A. PARTS LAYOUT & PARTS LIST
B. SCREWS & WASHERS LIST
C. NUMERICAL INDEX

II. ABOUT THIS MANUAL

A PARTS LAYOUT & PARTS LIST

Parts layout illustration

a) Parts search

Find a part from the parts layout illustration and find its key number from the parts list to identify the part number and name. For screws, nuts, washers, lock washers, pins, spacers, see SCREWS &WASHERS LIST.

Note: **If parts have the same or similar shape but different specifications, their key number is assigned to several part numbers and names in the parts list.**

b) Parts replacement procedure

To replace parts, the parts layout illustrations have figure numbers according to the disassembly procedure of the product. The parts that require careful work are shown the illustration.

Parts list

a) FIGURE & KEY No.

The FIGURE & KEY No. column corresponds to the key numbers assigned to the parts in the parts layout illustration.
It also corresponds to the part locations printed on the PC board.

b) PART NUMBER

The PART NUMBER column gives the part numbers corresponding to the key numbers. To order a part, indicate the part number clearly.

Note: **Parts marked NPN are not service parts.**

c) RANK

The service parts with N in the RANK column are order parts.

d) QTY

The QTY column gives the number of parts in the corresponding components layout illustration.

e) DESCRIPTION

The DESCRIPTION column gives the part names in English.
To order a part, indicate the part name, too.

OPTIONS & CONSUMABLES

These are illustrations and a list of units that can be used as optional consumable equipments.

TOOL LIST

This is a list of tools used for servicing products.

B. SCREWS & WASHERS LIST

This is a list of screws, nuts, washers, lock washers, pins, and spacers.
The QTY column does not give the number of parts used.

C. NUMERICAL INDEX

All the parts listed in this parts catalog are arranged in order of part number.
You can identify part locations and names from the NUMERICAL INDEX.

A. PARTS LAYOUT & PARTS LIST

FIGURE 1 PRINTER & ACCESSORIES

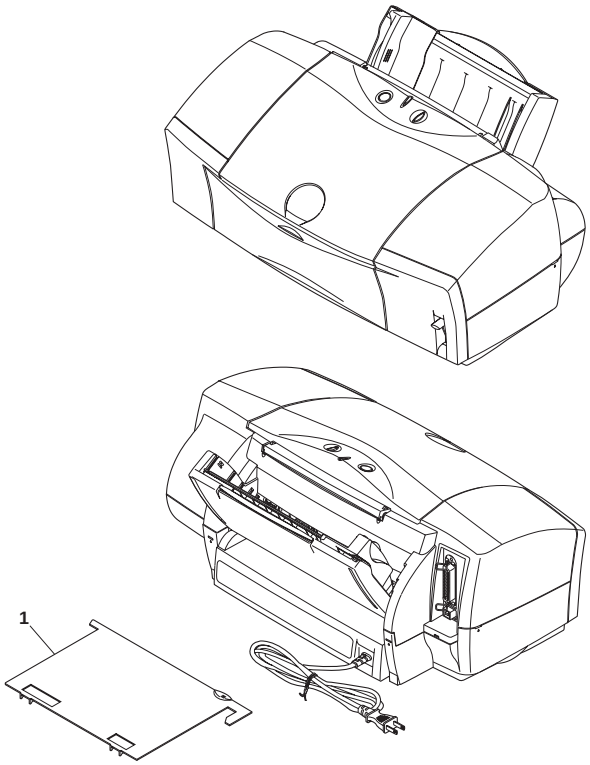

FIGURE 2 COVER

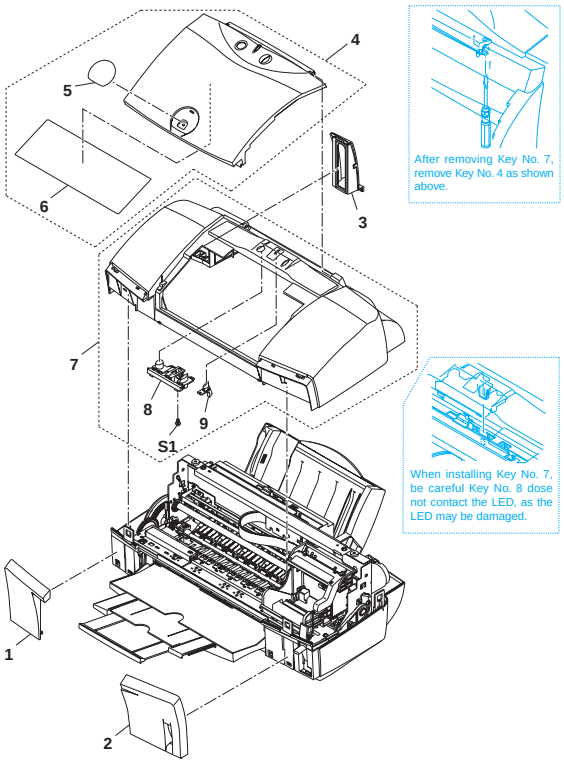

FIGURE 3 LOGIC BOARD

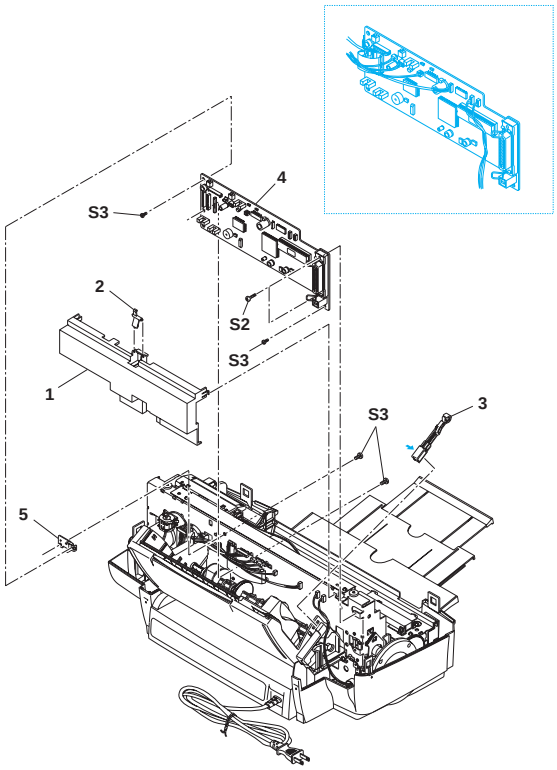

FIGURE 4 BOTTOM CASE & ASF UNIT

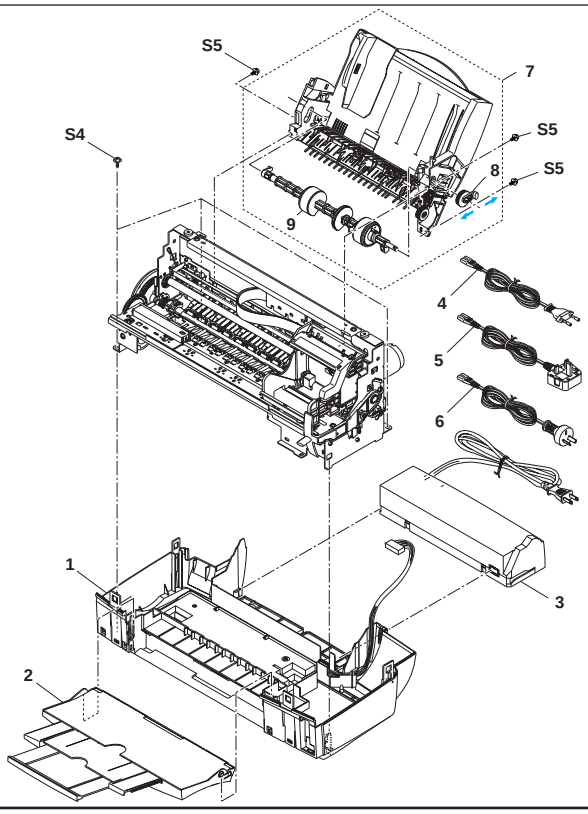

FIGURE & KEY NO.	PART NUMBER	RANK	QTY	DESCRIPTION	REMARKS
1- 1	QG5-1391-000	N	1	CLEANER PLATE ASS'Y	
2- 1	QF5-0507-000		1	FRONT COVER ASS'Y(L)	
2	QF5-0508-000		1	FRONT COVER ASS'Y(R)	
3	QB1-3983-000		1	COVER, I/F	
4	QG5-1389-000		1	ACCESS COVER UNIT	FOR BJC-8200
	QG5-1390-000		1	ACCESS COVER UNIT	FOR BJC-8200 PHOTO
5	QB1-4356-000		1	PLATE, MODEL NAME	FOR BJC-8200
	QB1-4685-000		1	PLATE, MODEL NAME	FOR BJC-8200 PHOTO
6	QB1-4355-000		1	LABEL, INSTRUCTION	
7	QG5-1369-000		1	UPPER COVER UNIT	
8	QB1-3987-000		1	BUTTON, PUSH	
9	QB1-3988-000		1	GUIDE, INDICATOR	
3- 1	QB1-4002-000		1	COVER, LOGIC BOARD	
2	QB1-4003-000		1	ARM, COVER SENSOR	
3	QB1-3610-000		1	HOLDER, SHEET FEEDER	
4	QG2-3058-030		1	LOGIC BOARD ASS'Y	
5	QB1-4091-000	N	1	HOLDER, LOGIC BOARD	
4- 1	QG5-1371-000		1	BOTTOM CASE UNIT	(WITH FOOT)
2	QG5-1372-000		1	OUTPUT TRAY UNIT	
3	QH3-3374-000		1	AC ADAPTER: 100/120V 50/60HZ	
	QH3-3375-000		1	AC ADAPTER: 220/240V 50/60HZ	(WITHOUT CORD)
4	WT3-5069-000		1	CORD, POWER	220V-240V
5	WT3-5090-000		1	CORD, POWER	220V-240V (UK)
6	WT3-5060-000		1	CORD, POWER	220V-240V (AUS)
7	QG5-1374-000		1	SHEET FEEDER UNIT	
8	QB1-2489-020		1	GEAR, CAM	
9	QG5-0828-020		1	PICK-UP ROLLER UNIT	

FIGURE 5 WASTE INK ABSORBER

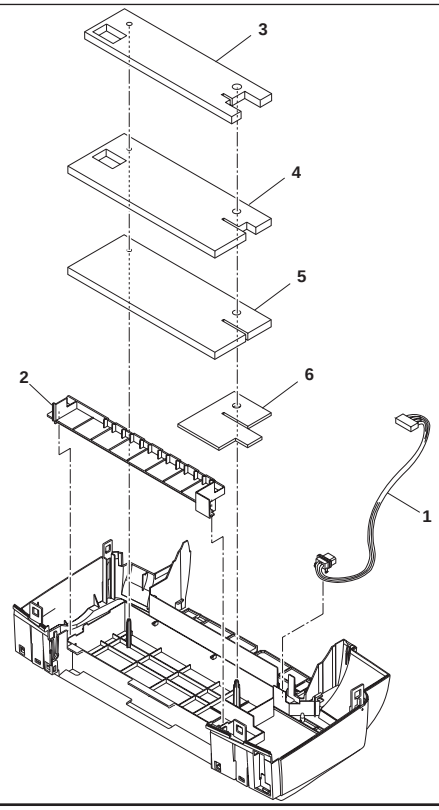

FIGURE 6 CARRIAGE UNIT

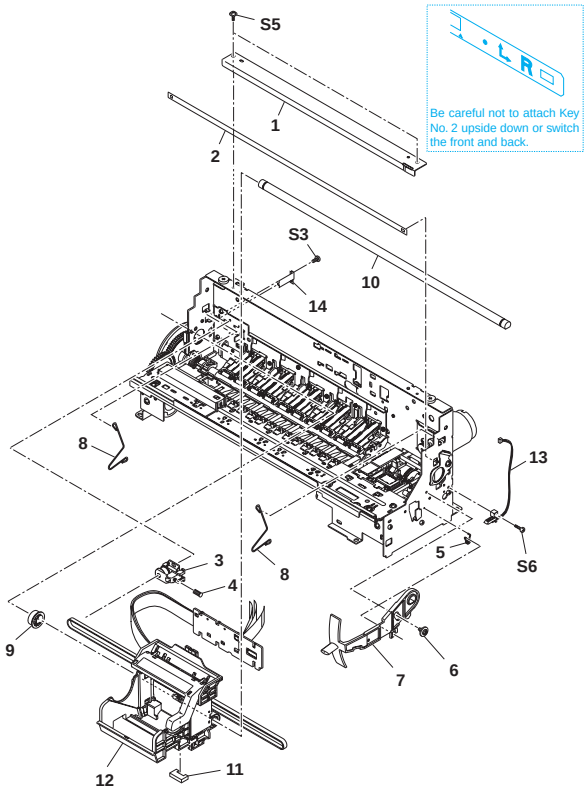

FIGURE 7 CARRIAGE PART

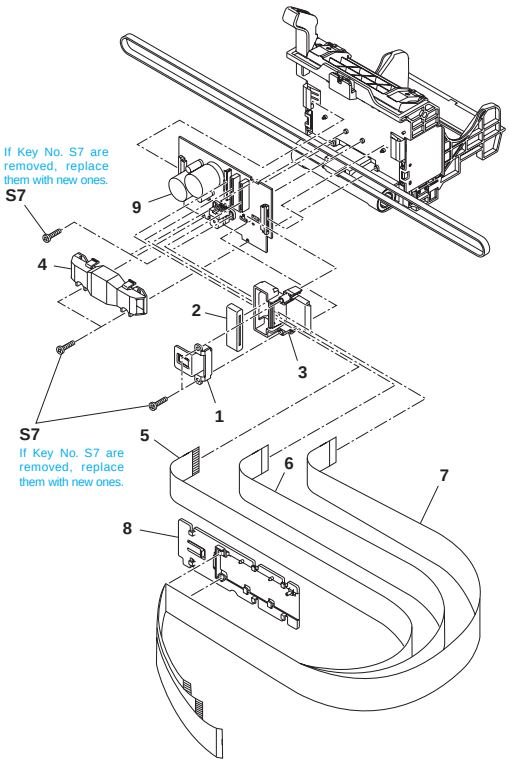

FIGURE 8 PURGE UNIT

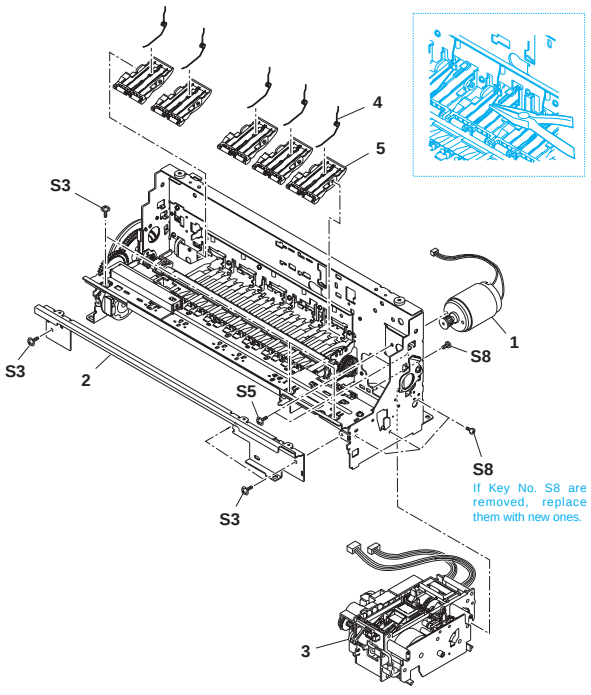

FIGURE & KEY NO.	PART NUMBER	RANK	QTY	DESCRIPTION	REMARKS
5 - 1	QG2-3061-000		1	DC CONNECTOR ASS'Y	(WITH CABLE)
2	QB1-3996-000		1	HOLDER, INK ABSORBER	
3	QB1-3995-000		1	ABSORBER, INK	
4	QB1-3994-000		1	ABSORBER, INK	
5	QB1-3993-000		1	ABSORBER, INK	
6	QB1-3992-000		1	ABSORBER, INK	
6 - 1	QB1-4008-000	N	1	FRAME, CARRIAGE GUIDE	
2	QB1-4009-000		1	FILM, TIMING SLIT	
3	QG5-1381-000		1	IDLE PULLEY ASS'Y	
4	QS5-2184-000		1	SPRING, TENSION	
5	QB1-3776-000		1	SPRING, TORSION	
6	QB1-4092-000		1	SHAFT, FORMS THICKNESS LEVER	
7	QB1-4014-000		1	LEVER, FORMS THICKNESS	
8	QB1-4013-000		2	CLIP, SHAFT	
9	QB1-4010-000		1	BUSHING	
10	QB1-4007-000	N	1	SHAFT, CARRIAGE	
11	QB1-4099-000		1	PAD, GREASE	
12	QG5-1380-040		1	CARRIAGE UNIT	
13	QG2-3062-000		1	SENSOR, FORMS THICKNESS	
14	QB1-4015-000		1	SPRING, LEAF	
7 - 1	QB1-4363-000		1	HOLDER, CABLE	
2	WE8-5343-000	N	1	FERRITE CORE	
3	QB1-4040-000		1	HOLDER, CARRIAGE RIBBON CABLE	
4	QB1-4041-000		1	COVER, SENSOR	
5	QH2-2333-000		1	CARRIAGE RIBBON CABLE	
6	QH2-2334-000		1	CARRIAGE RIBBON CABLE	
7	QH2-2397-000		1	CARRIAGE RIBBON CABLE	
8	QB1-4030-000		1	HOLDER, CARRIAGE RIBBON CABLE	
9	QG2-3059-000		1	CARRIAGE BOARD ASS'Y	
8 - 1	QH4-4268-000		1	MOTOR, CARRIAGE	DC, UNDER 10W
2	QB1-4004-000	N	1	STAY, FRONT	
3	QG5-1382-000		1	PURGE UNIT	
4	QB1-3633-000		5	SPRING, TORSION	
5	QG5-1387-000		5	PRESSURE ROLLER ASS'Y	

FIGURE 9 PAPER FEED (1)

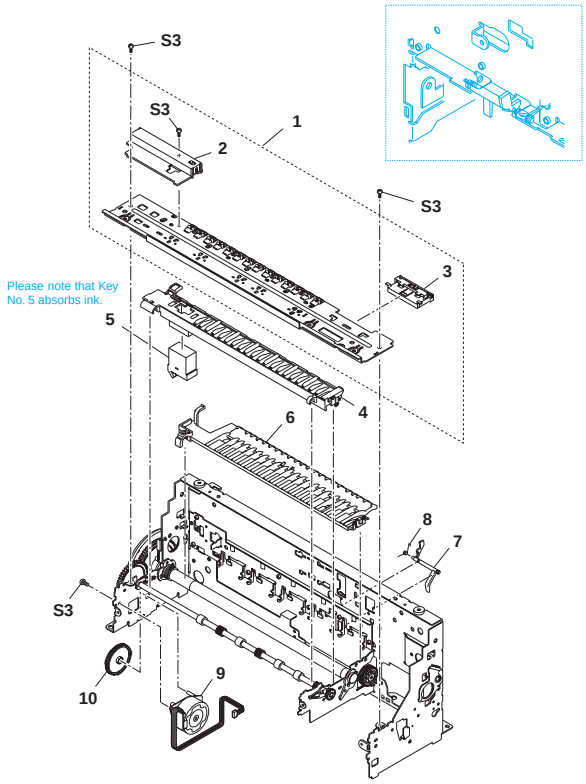

FIGURE 10 PAPER FEED (2)

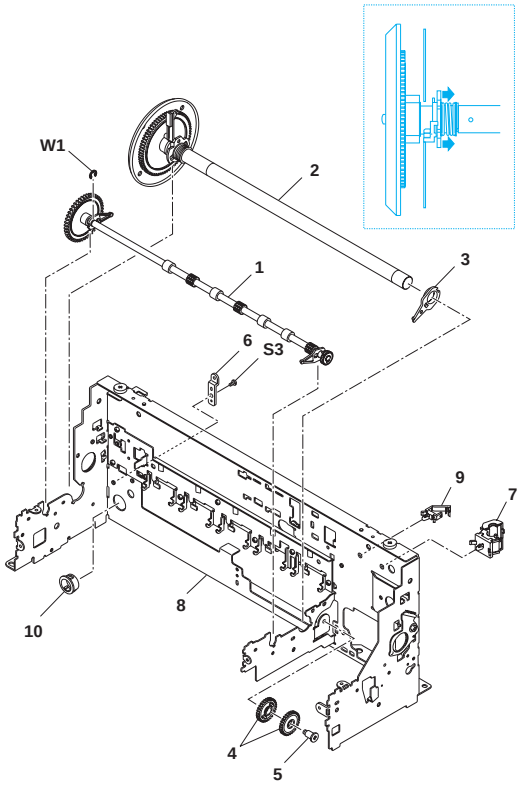

FIGURE 11 LOGIC BOARD COMPONENT

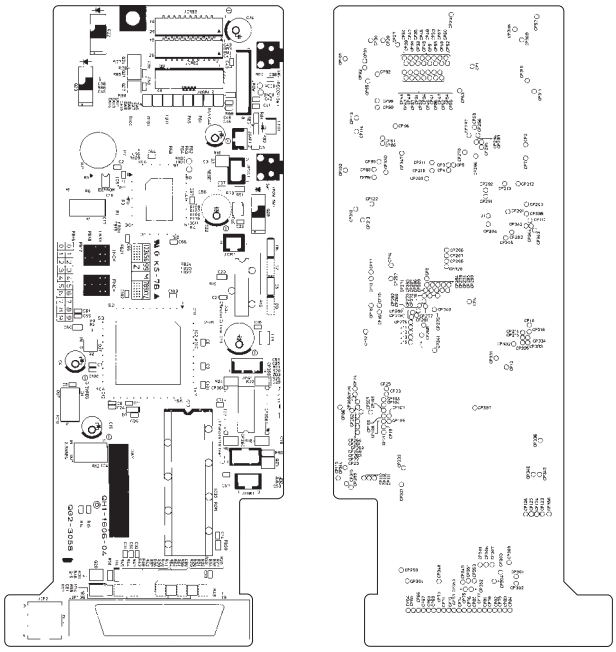

Top View

Bottom View

FIGURE & KEY NO.	PART NUMBER	RANK	QTY	DESCRIPTION	REMARKS
9 - 1	QG5-1379-000		1	SPUR HOLDER ASS'Y	
2	QG2-3060-000		1	INK SENSOR ASS'Y	
3	QG5-1386-000		1	WIPER CLEANER ASS'Y	
4	QB1-4005-000		1	PLATEN	
5	QB1-4347-000		1	ABSORBER, INK	
6	QB1-4006-000		1	PLATE, PAPER FEED	
7	QB1-3639-000		1	ARM, PAPER SENSOR	
8	QB1-3634-000		1	SPRING, TORSION	
9	QH4-4267-000		1	MOTOR, PAPER FEED	DC STEPPING, UNDER 10W
10	QS5-0154-000		1	GEAR, SLOW DOWN	
10 - 1	QG5-1378-000		1	EJECT ROLLER ASS'Y	
2	QG5-1377-000		1	FEED ROLLER ASS'Y	
3	QB1-4100-000		1	BUSHING	
4	QS5-0155-000		2	GEAR, TRANSMISSION	
5	QB1-4016-000		1	SHAFT, TRANSMISSION GEAR	
6	QB1-4090-000	N	1	HOLDER, LOGIC BOARD	
7	WE8-5393-000		1	CLAMP, CABLE	
8	NPN		1	FRAME UNIT	
9	WT2-0317-000		1	CLIP, CABLE	
10	WT2-5142-000		1	BUSHING, CORD	
11 - BZ 1	WR1-5057-000	N	1	BEEPER: PKM13EPY-4000-TF01	
FU 1	WD1-0273-000		1	IC, PROTECT OR: ICP-N20	
FU 2	WD1-0275-000		1	IC, PROTECT OR: ICP-N38	
IC 1	WA7-0833-000	N	1	IC, M31003S6FP, MPU	
IC 2	QH8-0208-000		1	IC, M66417-0005FP, ASIC	
IC 3	QH8-0202-030		1	IC, MSM538002E-T5RS, MASKED-ROM	
IC 4	WA4-7306-000	N	1	IC, TA48M025F, REGULATOR	
IC 6	WA4-7307-000		1	IC, A3952SB, DRIVER	
IC 7	WA4-7317-000		1	IC, TB62200AF, DRIVER	
IC 9	WA7-0947-000	N	1	IC, S-93C56AFJ, EEP-ROM	
IC 10	WA4-6869-000	N	1	IC, UPC29M33T, REGULATOR	
IC 11	WA4-7333-000	N	1	IC, M62720GP, RESET	
LED 1	WG2-5157-000	N	1	LED: SEC2494C	
Q 22	WG8-5255-000	N	1	IC, TLP832, PHOTO INTERRUPTER	
Q 23	WG8-5356-000	N	1	IC, TLP831(CANO), PHOTO INTERRUPTER	
Q 28	WG8-5356-000	N	1	IC, TLP831(CANO), PHOTO INTERRUPTER	
SW 1	WC2-5329-000	N	1	SWITCH, PUSH: KSH0636AT	
SW 2	WC2-5329-000	N	1	SWITCH, PUSH: KSH0636AT	
X 1	QH8-0205-000	N	1	OSCILLATOR, QUARTS: 24.000HZ	

FIGURE 12 CARTRIDGE

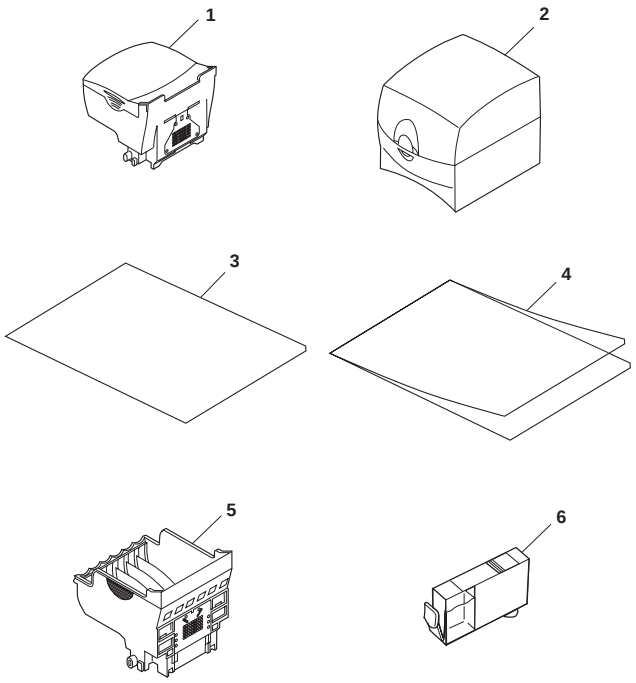

FIGURE 13 TOOL

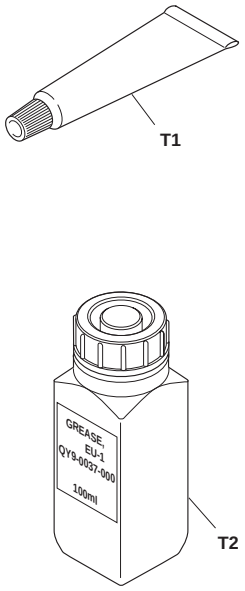

FIGURE & KEY NO.	PART NUMBER	RANK	QTY	DESCRIPTION	REMARKS
12 - 1	QG3-4002-000	N	1	SCANNING CARTRIDGE	
2	QG1-5743-000	N	1	CARTRIDGE CONTAINER	
3	QA2-4532-000		1	SHEET, WHITE STANDARD	
4	QA2-4623-000		1	HOLDER, PLASTIC (III)	A4
	QA2-4628-000	N	1	HOLDER, SCANNING	B5
5	NPN		1	BJ CARTRODGE	CONSUMABLES
6	NPN		1	BLACK INK TANK	CONSUMABLES
	NPN		1	CYAN INK TANK	CONSUMABLES
	NPN		1	MAGENTA INK TANK	CONSUMABLES
	NPN		1	YELLOW INK TANK	CONSUMABLES
	NPN		1	PHOTO CYAN INK TANK	CONSUMABLES
	NPN		1	PHOTO MAGENTA INK TANK	CONSUMABLES
T - 1	CK-0562-000		1	GREASE, MOLYKOTE PG-641	
2	QY9-0037-000		1	GREASE EU-1	

B. SCREWS & WASHERS LIST

SCREWS

FIGURE & KEY NO.	PART NUMBER	RANK	QTY	DESCRIPTION	REMARKS
S - 1	XB4-7300-809			SCREW, B-TIGHT: M3 X 8 MM	
2	XB1-2301-207			SCREW, M3x12	
3	XB1-2300-407			SCREW, M3x4	
4	XA9-1146-000			SCREW, TP, M3X8	
5	XB6-7300-607			SCREW, TP: M3 x 6 MM	
6	XB1-2301-007			SCREW, BH3X10	
7	XA9-1128-000			SCREW, M2X8	
8	XB4-7300-607			SCREW, PAN HEAD SELF-TAPPING, M3x6	

WASHERS

FIGURE & KEY NO.	PART NUMBER	RANK	QTY	DESCRIPTION	REMARKS
W - 1	XD2-1100-422			RETAINING RING (E-TYPE)	

C. NUMERICAL INDEX

PART NUMBER	FIGURE & KEY NO.	DESCRIPTION
CK-0562-000	T - 1	GREASE, MOLYKOTE PG-641
QA2-4532-000	12 - 3	SHEET, WHITE STANDARD
QA2-4623-000	12 - 4	HOLDER, PLASTIC (III)
QA2-4628-000	12 - 4	HOLDER, SCANNING
QB1-2489-020	4 - 8	GEAR, CAM
QB1-3610-000	3 - 3	HOLDER, SHEET FEEDER
QB1-3633-000	8 - 4	SPRING, TORSION
QB1-3634-000	9 - 8	SPRING, TORSION
QB1-3639-000	9 - 7	ARM, PAPER SENSOR
QB1-3776-000	6 - 5	SPRING, TORSION
QB1-3983-000	2 - 3	COVER, I/F
QB1-3987-000	2 - 8	BUTTON, PUSH
QB1-3988-000	2 - 9	GUIDE, INDICATOR
QB1-3992-000	5 - 6	ABSORBER, INK
QB1-3993-000	5 - 5	ABSORBER, INK
QB1-3994-000	5 - 4	ABSORBER, INK
QB1-3995-000	5 - 3	ABSORBER, INK
QB1-3996-000	5 - 2	HOLDER, INK ABSORBER
QB1-4002-000	3 - 1	COVER, LOGIC BOARD
QB1-4003-000	3 - 2	ARM, COVER SENSOR
QB1-4004-000	8 - 2	STAY, FRONT
QB1-4005-000	9 - 4	PLATEN
QB1-4006-000	9 - 6	PLATE, PAPER FEED
QB1-4007-000	6 - 10	SHAFT, CARRIAGE
QB1-4008-000	6 - 1	FRAME, CARRIAGE GUIDE
QB1-4009-000	6 - 2	FILM, TIMING SLIT
QB1-4010-000	6 - 9	BUSHING
QB1-4013-000	6 - 8	CLIP, SHAFT
QB1-4014-000	6 - 7	LEVER, FORMS THICKNESS
QB1-4015-000	6 - 14	SPRING, LEAF
QB1-4016-000	10 - 5	SHAFT, TRANSMISSION GEAR
QB1-4030-000	7 - 8	HOLDER, CARRIAGE RIBBON CABLE
QB1-4040-000	7 - 3	HOLDER, CARRIAGE RIBBON CABLE
QB1-4041-000	7 - 4	COVER, SENSOR
QB1-4090-000	10 - 6	HOLDER, LOGIC BOARD
QB1-4091-000	3 - 5	HOLDER, LOGIC BOARD
QB1-4092-000	6 - 6	SHAFT, FORMS THICKNESS LEVER
QB1-4099-000	6 - 11	PAD, GREASE
QB1-4100-000	10 - 3	BUSHING
QB1-4347-000	9 - 5	ABSORBER, INK
QB1-4355-000	2 - 6	LABEL, INSTRUCTION
QB1-4356-000	2 - 5	PLATE, MODEL NAME
QB1-4363-000	7 - 1	HOLDER, CABLE
QB1-4685-000	2 - 5	PLATE, MODEL NAME
QF5-0507-000	2 - 1	FRONT COVER ASS'Y(L)
QF5-0508-000	2 - 2	FRONT COVER ASS'Y(R)
QG1-5743-000	12 - 2	CARTRIDGE CONTAINER
QG2-3058-030	3 - 4	LOGIC BOARD ASS'Y
QG2-3059-000	7 - 9	CARRIAGE BOARD ASS'Y
QG2-3060-000	9 - 2	INK SENSOR ASS'Y
QG2-3061-000	5 - 1	DC CONNECTOR ASS'Y
QG2-3062-000	6 - 13	SENSOR, FORMS THICKNESS
QG3-4002-000	12 - 1	SCANNING CARTRIDGE
QG5-0828-020	4 - 9	PICK-UP ROLLER UNIT
QG5-1369-000	2 - 7	UPPER COVER UNIT
QG5-1371-000	4 - 1	BOTTOM CASE UNIT
QG5-1372-000	4 - 2	OUTPUT TRAY UNIT
QG5-1374-000	4 - 7	SHEET FEEDER UNIT

PART NUMBER	FIGURE & KEY NO.	DESCRIPTION
QG5-1377-000	10 - 2	FEED ROLLER ASS'Y
QG5-1378-000	10 - 1	EJECT ROLLER ASS'Y
QG5-1379-000	9 - 1	SPUR HOLDER ASS'Y
QG5-1380-040	6 - 12	CARRIAGE UNIT
QG5-1381-000	6 - 3	IDLE PULLEY ASS'Y
QG5-1382-000	8 - 3	PURGE UNIT
QG5-1386-000	9 - 3	WIPER CLEANER ASS'Y
QG5-1387-000	8 - 5	PRESSURE ROLLER ASS'Y
QG5-1389-000	2 - 4	ACCESS COVER UNIT
QG5-1390-000	2 - 4	ACCESS COVER UNIT
QG5-1391-000	1 - 1	CLEANER PLATE ASS'Y
QH2-2333-000	7 - 5	CARRIAGE RIBBON CABLE
QH2-2334-000	7 - 6	CARRIAGE RIBBON CABLE
QH2-2397-000	7 - 7	CARRIAGE RIBBON CABLE
QH3-3374-000	4 - 3	AC ADAPTER: 100/120V 50/60HZ
QH3-3375-000	4 - 3	AC ADAPTER: 220/240V 50/60HZ
QH4-4267-000	9 - 9	MOTOR, PAPER FEED
QH4-4268-000	8 - 1	MOTOR, CARRIAGE
QH8-0202-030	11 - IC 3	IC, MSM538002E-T5RS, MASKED-ROM
QH8-0205-000	11 - X 1	OSCILLATOR, QUARTS: 24.000HZ
QH8-0208-000	11 - IC 2	IC, M66417-0005FP, ASIC
QS5-0154-000	9 - 10	GEAR, SLOW DOWN
QS5-0155-000	10 - 4	GEAR, TRANSMISSION
QS5-2184-000	6 - 4	SPRING, TENSION
QY9-0037-000	T - 2	GREASE EU-1
WA4-6869-000	11 - IC 10	IC, UPC29M33T, REGULATOR
WA4-7306-000	11 - IC 4	IC, TA48M025F, REGULATOR
WA4-7307-000	11 - IC 6	IC, A3952SB, DRIVER
WA4-7317-000	11 - IC 7	IC, TB62200AF, DRIVER
WA4-7333-000	11 - IC 11	IC, M62720GP, RESET
WA7-0833-000	11 - IC 1	IC, M31003S6FP, MPU
WA7-0947-000	11 - IC 9	IC, S-93C56AFJ, EEP-ROM
WC2-5329-000	11 - SW 1	SWITCH, PUSH: KSH0636AT
	11 - SW 2	
WD1-0273-000	11 - FU 1	IC, PROTECT OR: ICP-N20
WD1-0275-000	11 - FU 2	IC, PROTECT OR: ICP-N38
WE8-5343-000	7 - 2	FERRITE CORE
WE8-5393-000	10 - 7	CLAMP, CABLE
WG2-5157-000	11 - LED 1	LED: SEC2494C
WG8-5255-000	11 - Q 22	IC, TLP832, PHOTO INTERRUPTER
WG8-5356-000	11 - Q 23	IC, TLP831(CANO), PHOTO INTERRUPTER
	11 - Q 28	
WR1-5057-000	11 - BZ 1	BEEPER: PKM13EPY-4000-TF01
WT2-0317-000	10 - 9	CLIP, CABLE
WT2-5142-000	10 - 10	BUSHING, CORD
WT3-5060-000	4 - 6	CORD, POWER
WT3-5069-000	4 - 4	CORD, POWER
WT3-5090-000	4 - 5	CORD, POWER
XA9-1128-000	S - 7	SCREW, M2X8
XA9-1146-000	S - 4	SCREW, TP, M3X8
XB1-2300-407	S - 3	SCREW, M3x4
XB1-2301-007	S - 6	SCREW, BH3X10
XB1-2301-207	S - 2	SCREW, M3x12
XB4-7300-607	S - 8	SCREW, PAN HEAD SELF-TAPPING, M3x6
XB4-7300-809	S - 1	SCREW, B-TIGHT: M3 X 8 MM
XB6-7300-607	S - 5	SCREW, TP: M3 x 6 MM
XD2-1100-422	W - 1	RETAINING RING (E-TYPE)

This document is printed on 100% recycled paper.

Canon

PRINTED IN JAPAN (IMPRIME AU JAPON)

CANON INC.